Michigan Pneumatic Tool, Inc.

MP-BD2BA-LR Long Reach Rammer, 2-1/2" Stroke
MP-BD1BA-LR Long Reach Rammer, 4" Stroke

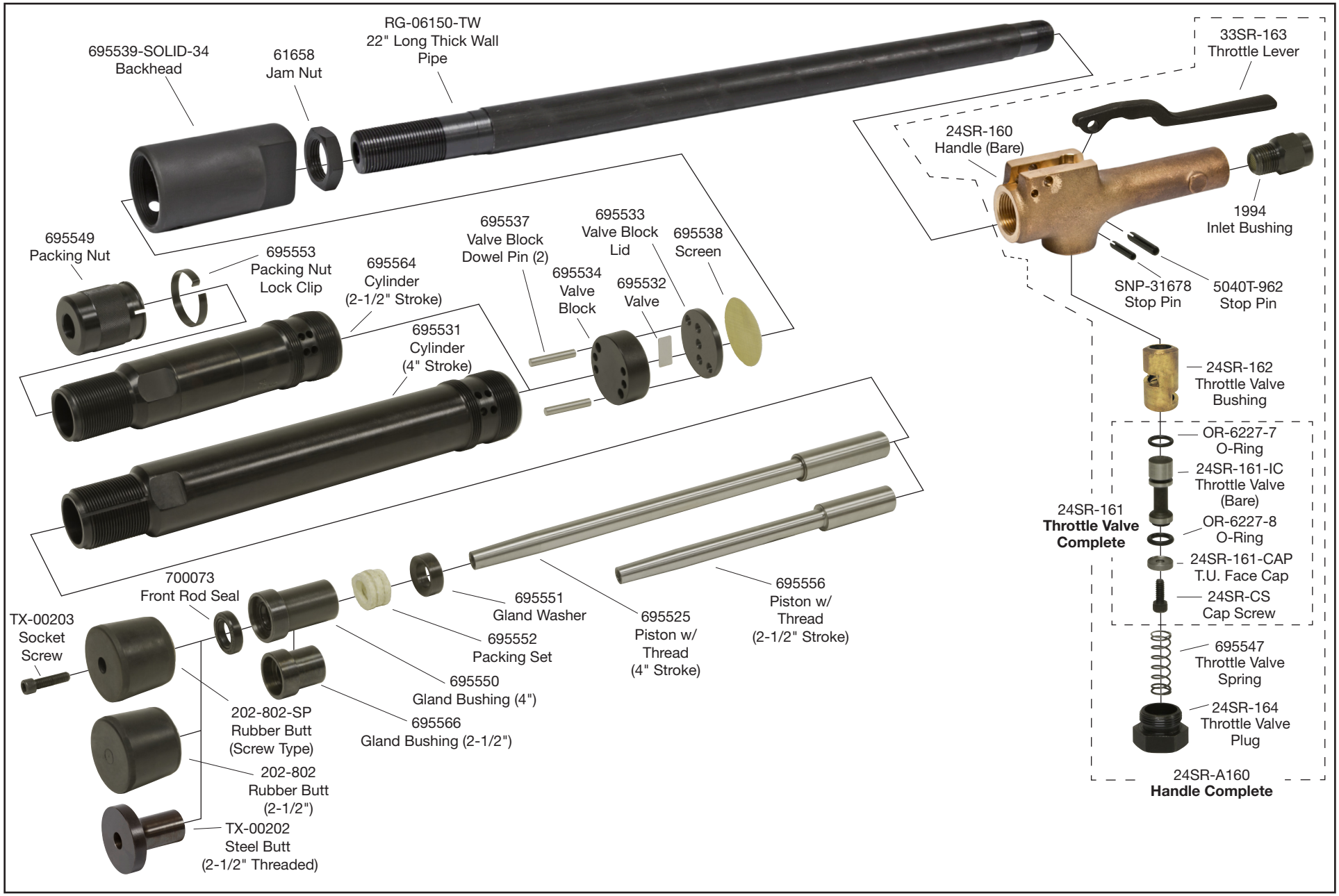

6850 Middlebelt Rd. • Romulus, MI 48174 • **1-800-521-8104** • Ph: (313) 933-5890 • Fax: (313) 933-0440
www.michiganpneumatic.com • e-mail: mpt@michiganpneumatic.com