Michigan Pneumatic Tool, Inc.

MP-133-ORANGE-NEP Rivet Buster - 8" Stroke, Non-Ejectable Piston
MP-1133-ORANGE-NEP Rivet Buster - 11" Stroke, Non-Ejectable Piston

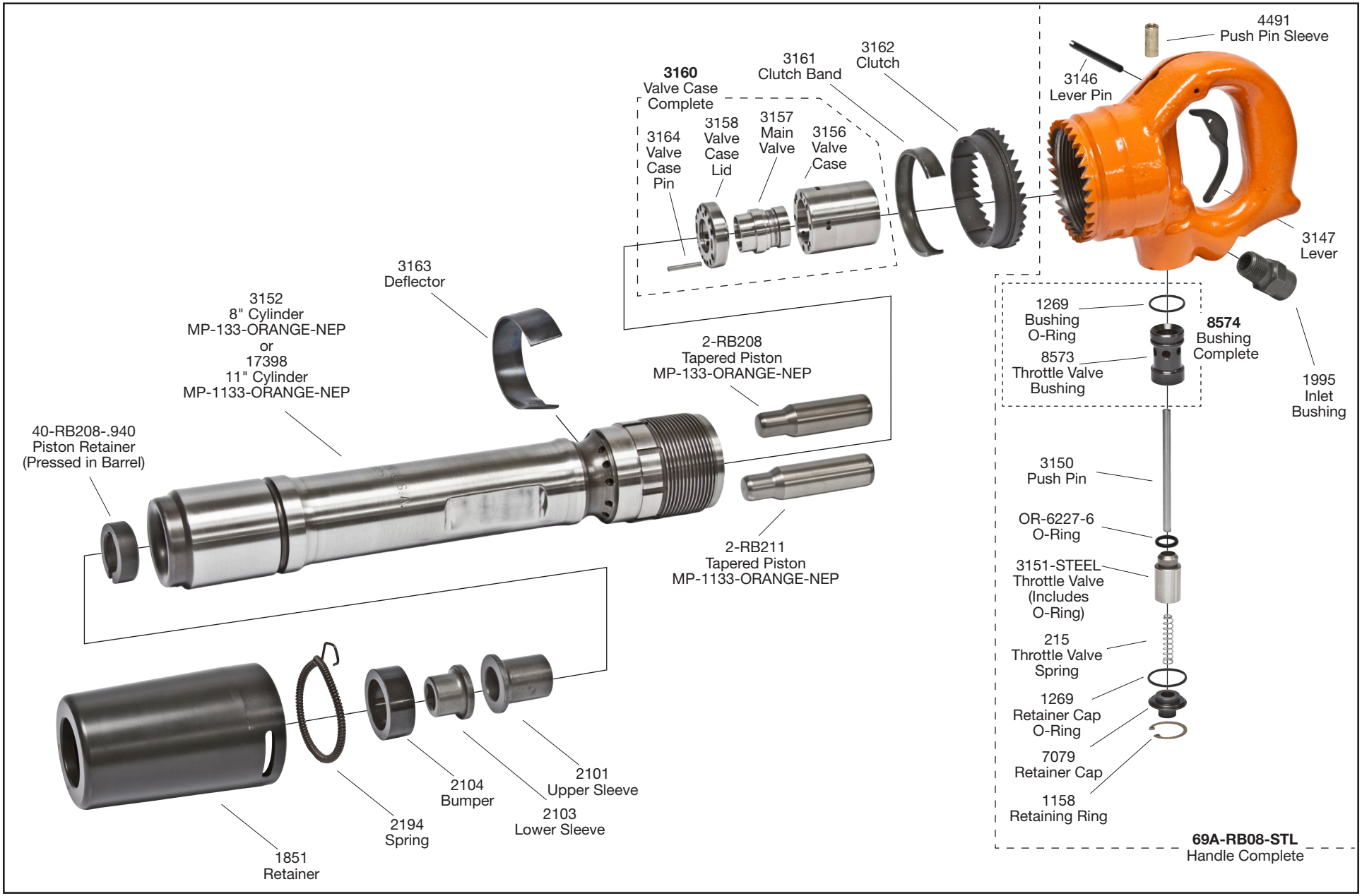

6850 Middlebelt Rd. • Romulus, MI 48174 • **1-800-521-8104** • Ph: (313) 933-5890 • Fax: (313) 933-0440
www.michiganpneumatic.com • e-mail: mpt@michiganpneumatic.com

01312019**Rev12** PFT | JD